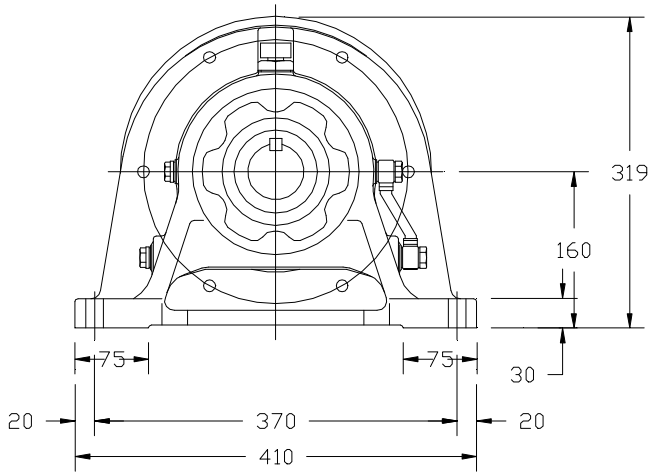

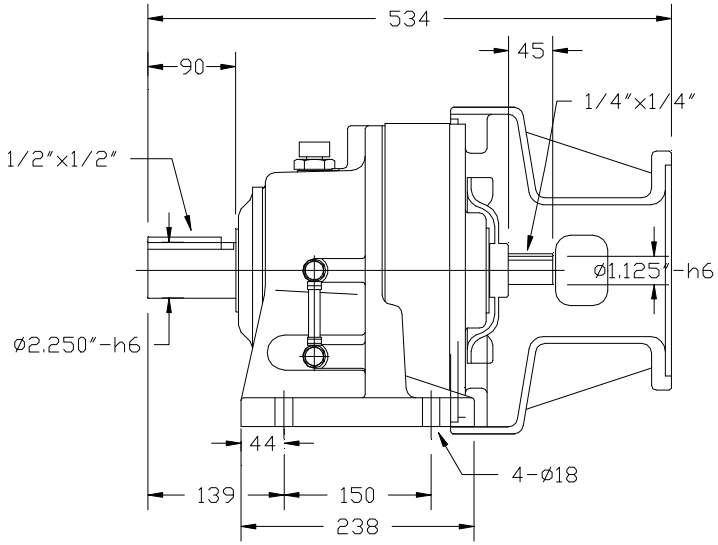

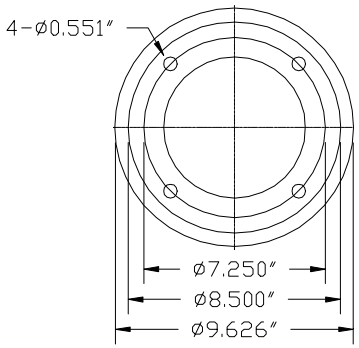

Note:
1. Unless otherwise specified, all units are in mm.
2. Lubrication: Oil Bath
3. See catalog for input hp and output torque specifications.
4. Specifications subject to change without prior notice.

MOUNTING	FOOT MOUNT	Drawn	L.M.	08/08/02	TITLE	DARALI GROUP
INPUT STYLE	C-FACE ADAPTER	Checked	S.B.	08/08/02	MODEL	B16-AHH250
WEIGHT	237 lbs	Approved	K.P.	08/08/02	DWG. NO.:	WEBB16AHH